Section 9 - Repair Parts List

9.1 Wheels and Casters

PT Transport For model CP50-100/100PT

1	**Part. no. SP-365**	Caster, Swivel 8” x 3” Poly, Roller Bearing
2	**Part. no. SP-553**	Wheel, 12” x 3” Poly, Roller Bearing

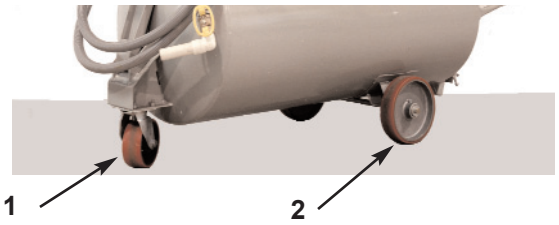

PL6 Transport For model CP50-100/100PL6

1	**Part. no. SP-297**	Caster, Swivel 8” RB-Phenolic
2	**Part. no. SP-298**	Caster, Rigid, 8” RB - Phenolic
3	**Part. no. SP-531**	Wheel Brakes

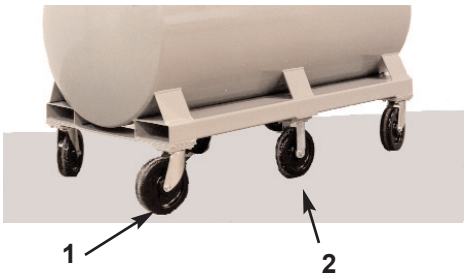

TW Transport For models: CP50-100/100TW,

1	**Part no. SP-270**	Caster-Swivel 12” x 3” MO, RT, RB
2	**Part no. SP-270-1**	Wheel, 12” x 3” Rubber, Roller Bearing, 3 1/2” Hub Length, 1” Axle
3	**Part no. SP-270-2**	Wheel, 16” x 3” Rubber, Roller Bearing, 3 1/4” Hub Length, 1” Axle

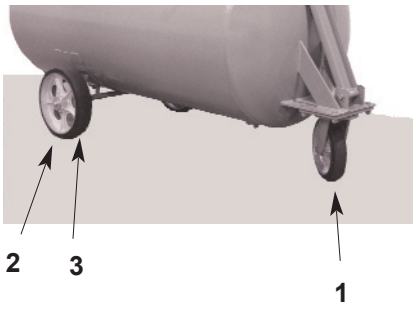

TW Transport For models: CP50-150/150TW, CP50-200/200TW

1	**Part no. SP-270**	Caster-Swivel 12” x 3” MO, RT, RB
2	**Part no. SP-270-1**	Wheel, 12” x 3” Rubber, Roller Bearing, 3 1/2” Hub Length, 1” Axle
3	**Part no. SP-271**	Wheel, 16” x 4” Rubber, Roller Bearing, 4 1/4” Hub Length, 1-1/4” Axle

9.2 CP50 PUMP

For models:

CP50-100/100PT
CP50-100/100TW
CP50-100/100PL6
CP50-100/100CB1
CP50-150/150TW
CP50-150/150PM
CP50-150/150CB1
CP50-200/200TW
CP50-200/200PM
CP50-200/200CB1

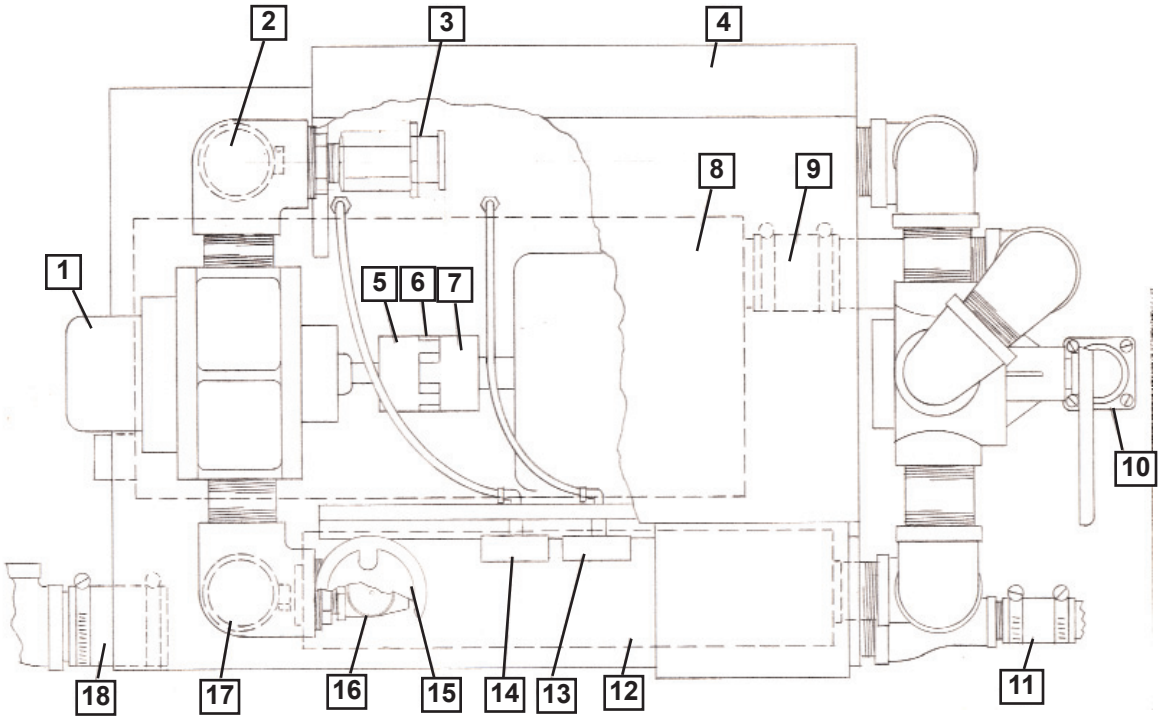

1	SP-388	Vacuum Pump, 3MVF	10	SP-355	Liquid Level Gauge, 36" for 150/150 tank
2	A220-277	Flexible Coupling, 2" Pipe	10	SP-356	Liquid Level Gauge, 42" for 200/200 tank
3	SP-506	Vacuum Relief Valve, 1"	11	A220-160	Flexible Coupling, 1" Pipe
4	A220-278	SE50 Hood	12	SP-394	Muffler, U5-1-1/2
5	SP-528	Flexible Coupling Body, 3/4" Bore	13	SP-195	Vacuum-Pressure Gauge, 2-1/2" Back Mount
6	SP-529	Flexible Coupling Spider	14	SP-195	Vacuum-Pressure Gauge, 2-1/2" Back Mount
7	SP-515	Flexible Coupling Body, 1" Bore	15	SP-442	Muffler, 1", N10
8	SP-441	Muffler, 22070	16	SP-443	Pressure Relief Valve, 1", 7 psi
9	A220-160	Flexible Coupling, 1" Pipe	17	A220-277	Flexible Coupling, 2" Pipe
10	SP-351	Liquid Level Gauge, 30" for 100/100 tank	18	A220-277	Flexible Coupling, 2" Pipe

Dirty Tank Valve

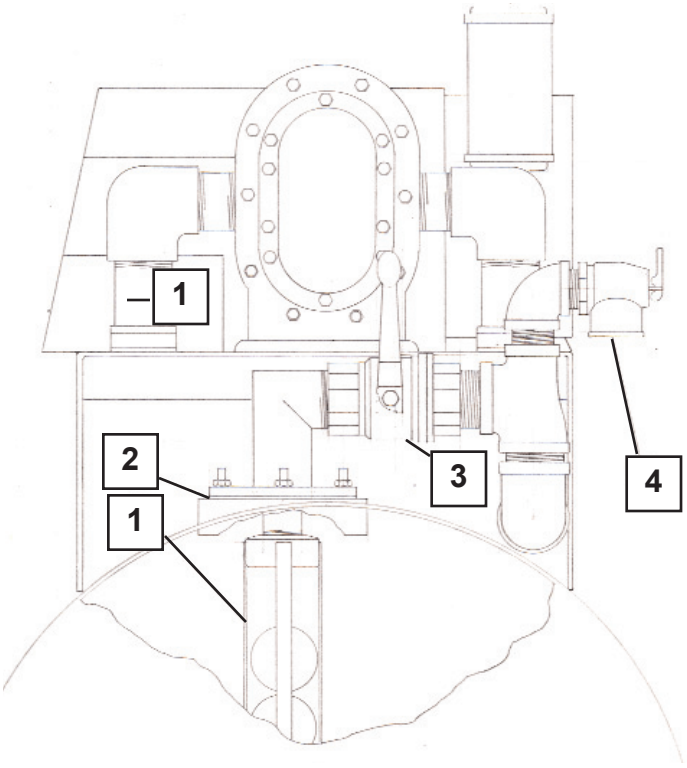

Clean Tank Valve

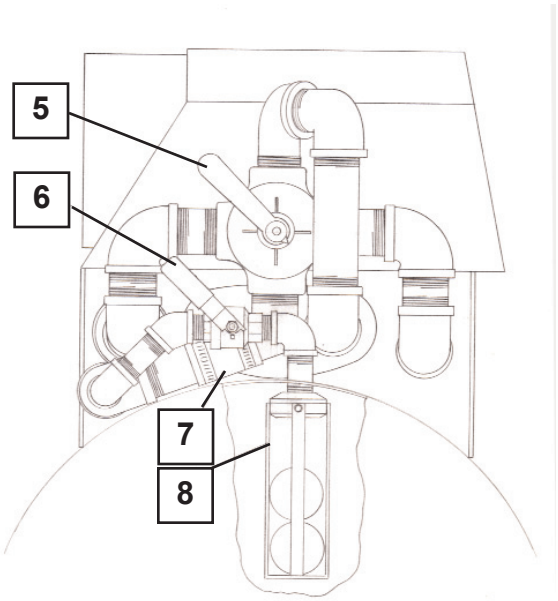

1	A210-148	Float Control Assembly. 1-1/4”	5	SP-444	4-Way Valve, 2”
2	A220-483	Float Control Square Flange Gasket	6	SP-463	Lever Operated 1” Valve
3	SP-446A	Lever Operated 2” Valve	7	A220-277	Flexible Coupling, 2” Pipe
4	SP-446	Pressure Relief Valve, 1-1/4” x 1-1/2”, 8 psi	8	A210-187	Float Control Assembly, 1”

9.3 Tank Components

For models: CP50-100/100PT, CP50-100/100TW, CP50-100/100PL6, CP50-100/100CB1, CP50-150/150TW, CP50-150/150PM, CP50-150/150CB1, CP50-200/200TW, CP50-200/200PM, CP50-200/200CBI

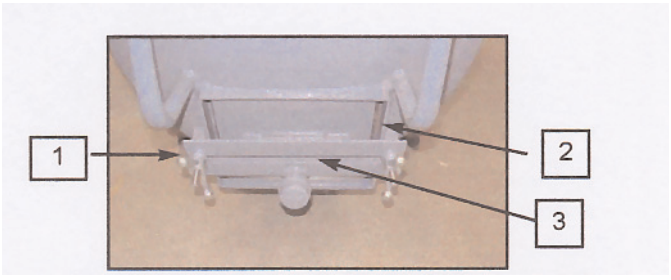

1	SP-104	Wing Nut - 1/2-13
2	A210-165	Cleanout Door Gasket
3	A220-240	Cleanout Door Assembly

9.4 FILTER COMPONENTS

For models:

CP50-100/100PT
CP50-100/100TW
CP50-100/100PL6
CP50-100/100CB1
CP50-150/150TW
CP50-150/150PM
CP50-150/150CB1
CP-200/200TW
CP50-200/200PM
CP50-200/200CB1

F23 Filter

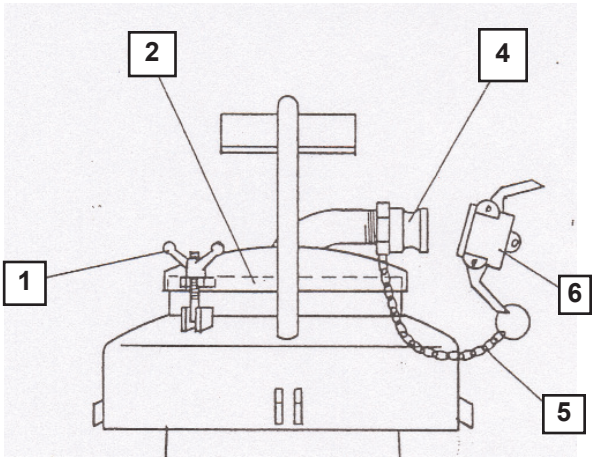

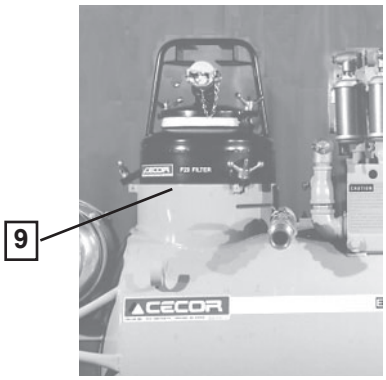

1	SP-104	Wing Nut, 1/2-13
2	A220-102	Filter Lid Gasket
3	A220-103	Filter Lid Assembly
4	SP-375	Disconnect Adapter 2” Male Threads, A
5	SP-373	6” Security Chain
6	SP-374	Disconnect Cap 2”
7	A220-101	Strainer Sleeve, 2.3 cubic feet, Polypropylene
8	A220-560	Strainer Sleeve, 2.3 cubic feet, white, fine weave
9	A210-306	Pot Lid Gasket

9.5 TOOLS & ACCESSORIES

For models:

CP50-100/100PT
CP50-100/100TW
CP50-100/100PL6
CP50-100/100CB1
CP50-150/150TW
CP50-150/150PM
CP50-150/150CB1
CP50-200/200TW
CP50-200/200PM
CP50-200CB1

1		A-210-965	STRAIGHT NOZZLE (FITS 2” HOSE)
2		A-220-151	FLARE NOZZLE (FITS 2” HOSE)
3		A-220-152	FLEXIBLE NOZZLE (FITS 2” HOSE)
4		A-220-562	NOZZLE VALVE, 1”
5		A-220-147	HOSE ASSEMBLY, 2” I.D. X 16’ LONG, CLEAR
5		A-220-147R	HOSE ASSEMBLY, 2” I.D. X 16’ LONG, RED
6		A-220-145	DISPENSING HOSE ASSEMBLY, CLEAR, 1-1/4” I.D. X 16’ LONG
7		SP-262-BN2	GASKET FOR 2” DISCONNECT SET
8		SP-198-2	DISCONNECT COUPER, 2”, FEMALE THREADS
9		A-220-624	FLOOR SQUEEGEE, 2”